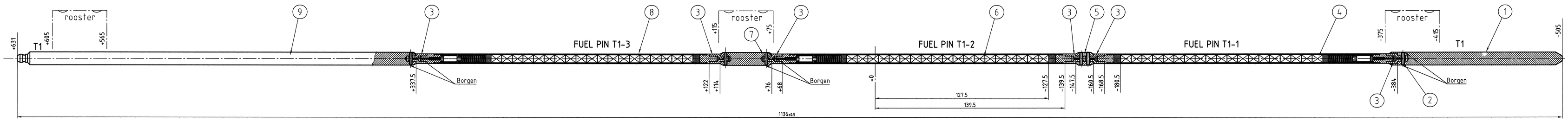

FUEL PIN T1-3 = Plan nr: 100901-.....
FUEL PIN T1-2 = Plan nr: 100901-.....
FUEL PIN T1-1 = Plan nr: 100901-.....

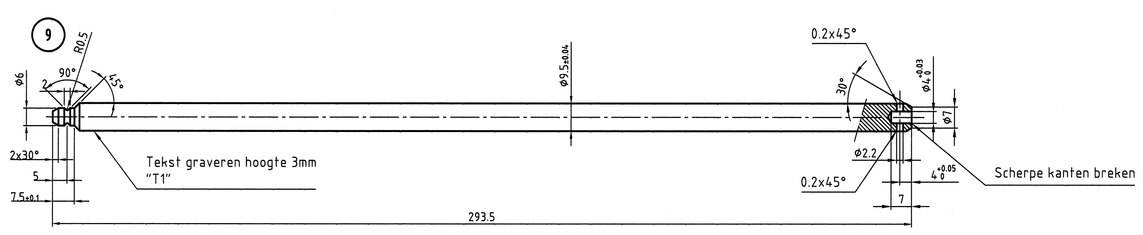

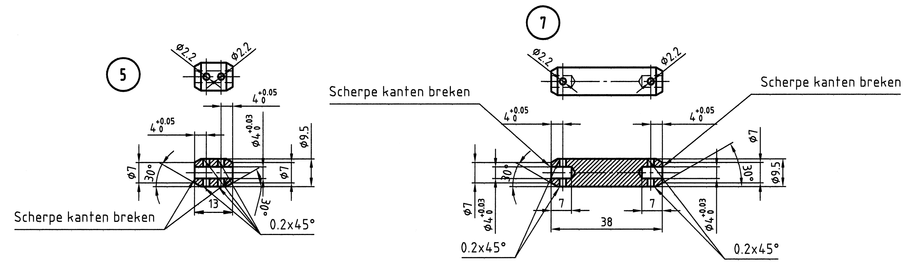

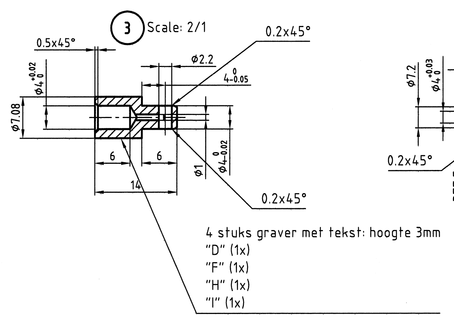

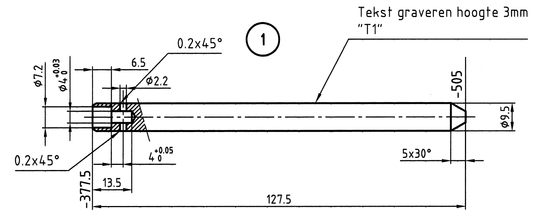

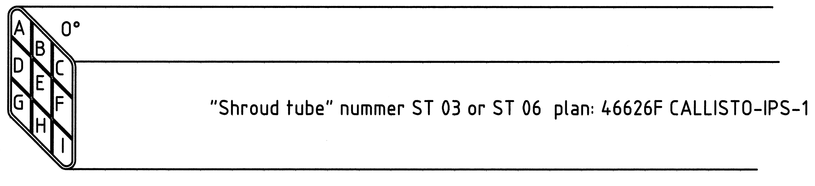

"Shroud tube" nummer ST 03 or ST 06 plan: 46626F CALLISTO-IPS-1

Niveau in koude toestand getekend :
warme toestand +25mm

N°	Denomination	Norm/Dimension	Q	Mat.	Remarks./Drawing number
10	Fuel pin T1-4	RESERVE	1	Zr-4	recuperatie van OMCO plan: 47961
9	Bovenste grijpkop		1	Zr-4	
8	Fuel pin T1-3		1	Zr-4	recuperatie van OMCO plan: 47961
7	Verbindingsstuk 38mm		1	Zr-4	
6	Fuel pin T1-2		1	Zr-4	recuperatie van OMCO plan: 47961
5	Verbindingsstuk 13mm		1	Zr-4	
4	Fuel pin T1-1		1	Zr-4	recuperatie van OMCO plan: 47961
3	Verbindingsstuk		8	Zr-4	
2	Spanhuls	DIN1481 ø2x9mm	8	Staal	
1	Onderste eindstuk		1	Zr-4	

Assembly:				Bill of materials:
Drawn by: Schelles F.	Date: 2009-02-11			
Checked: Weber H.	Date: 2009-12-22			
Verified: Gys A.	Date: 2009-12-22			
Approved: Vanwalle H.	Date: 2009-12-22	Rev.	Date:	Modification By:

Insp. Exp. Grp. ANS-DEO	No: 100901-000	Rev.:	Status CFC	Units: mm	Scale 1/1; 2/1
SCK•CEN STUDIECENTRUM VOOR KERNENERGIE CENTRE D'ETUDE DE L'ENERGIE NUCLEAIRE	Task ND0501200-02	Dossier THOMOX	Roughness Surface Ra µm		Tolerance NBN 602 - F (ISO 2768-f)

THOMOX
SEGMENT AND ASSEMBLY ROD

This drawing is the exclusive property of the SCK•CEN. Reproduction or disclosure to third parties, in any form whatsoever, are not allowed unless written consent of the proprietor.